~~CONFIDENTIAL~~

BASELINE RENDEZVOUS CONFIGURATION

GENERAL ARRANGEMENT

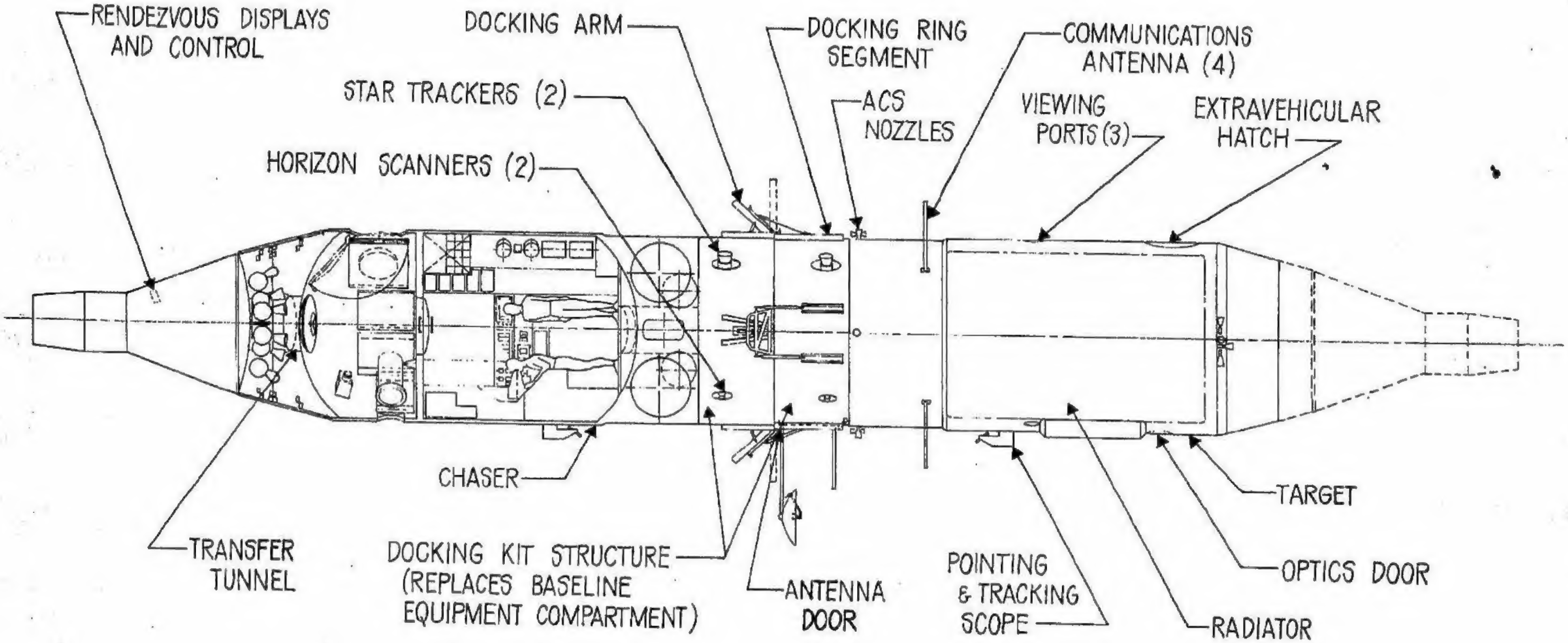
RENDEZVOUS DISPLAYS AND CONTROL
DOCKING ARM
DOCKING RING SEGMENT
COMMUNICATIONS ANTENNA (4)
STAR TRACKERS (2)
ACS NOZZLES
VIEWING PORTS (3)
EXTRAVEHICULAR HATCH
HORIZON SCANNERS (2)
CHASER
TARGET
TRANSFER TUNNEL
DOCKING KIT STRUCTURE (REPLACES BASELINE EQUIPMENT COMPARTMENT)
ANTENNA DOOR
POINTING & TRACKING SCOPE
OPTICS DOOR
RADIATOR

~~CONFIDENTIAL~~

DOWNGRADED AT 3 YEAR INTERVALS;
DECLASSIFIED AFTER 12 YEARS
DOD DIR 5200.10

AEROSPACE CORPORATION

MOL-4 -Y18836 R-
AD64 0000 03794 003

~~SECRET~~

VEHICLE CONFIGURATION

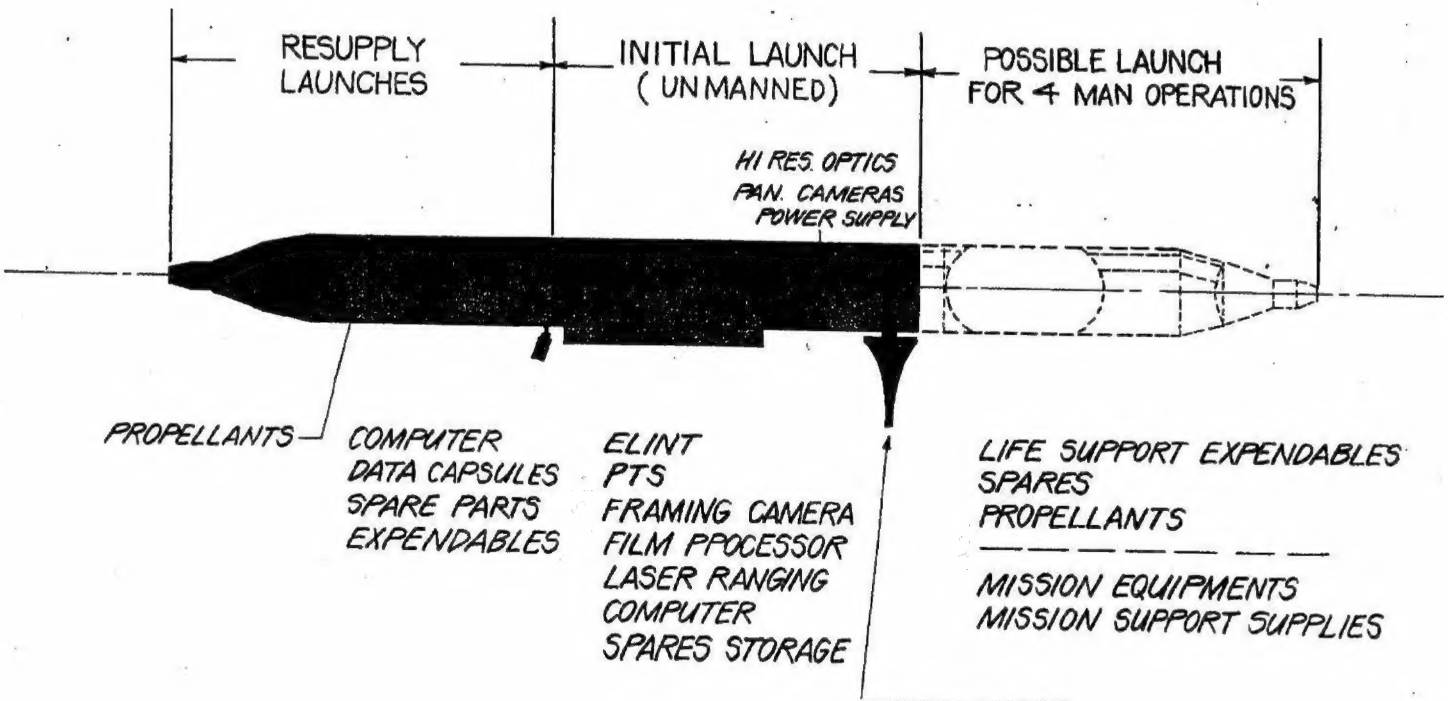
RESUPPLY LAUNCHES
INITIAL LAUNCH (UNMANNED)
POSSIBLE LAUNCH FOR 4 MAN OPERATIONS
HI RES. OPTICS
PAN. CAMERAS
POWER SUPPLY
PROPELLANTS
COMPUTER
DATA CAPSULES
SPARE PARTS
EXPENDABLES
ELINT
PTS
FRAMING CAMERA
FILM PPOCESSOR
LASER RANGING
COMPUTER
SPARES STORAGE
LIFE SUPPORT EXPENDABLES
SPARES
PROPELLANTS
MISSION EQUIPMENTS
MISSION SUPPORT SUPPLIES

[redacted]
b)(1) 1.4c,
b)(3) 10
.S.C. 424

~~SECRET~~

THIS DOCUMENT CONTAINS INFORMATION AFFECTING THE NATIONAL DEFENSE OF THE UNITED STATES WITHIN THE MEANING OF THE ESPIONAGE LAWS, TITLE 18 U.S.C. SECTION 793 AND 794. ITS TRANSMISSION OR THE REVELATION OF ITS CONTENTS IN ANY MANNER TO AN UNAUTHORIZED PERSON IS PROHIBITED BY LAW.

DOWNGRADED AT 12 YEAR INTERVALS; NOT AUTOMATICALLY DECLASSIFIED. DOD DIR 5200.10

AEROSPACE CORPORATION

IN 11-19 64

~~CONFIDENTIAL~~

LABORATORY VEHICLE INTERIOR ARRANGEMENT

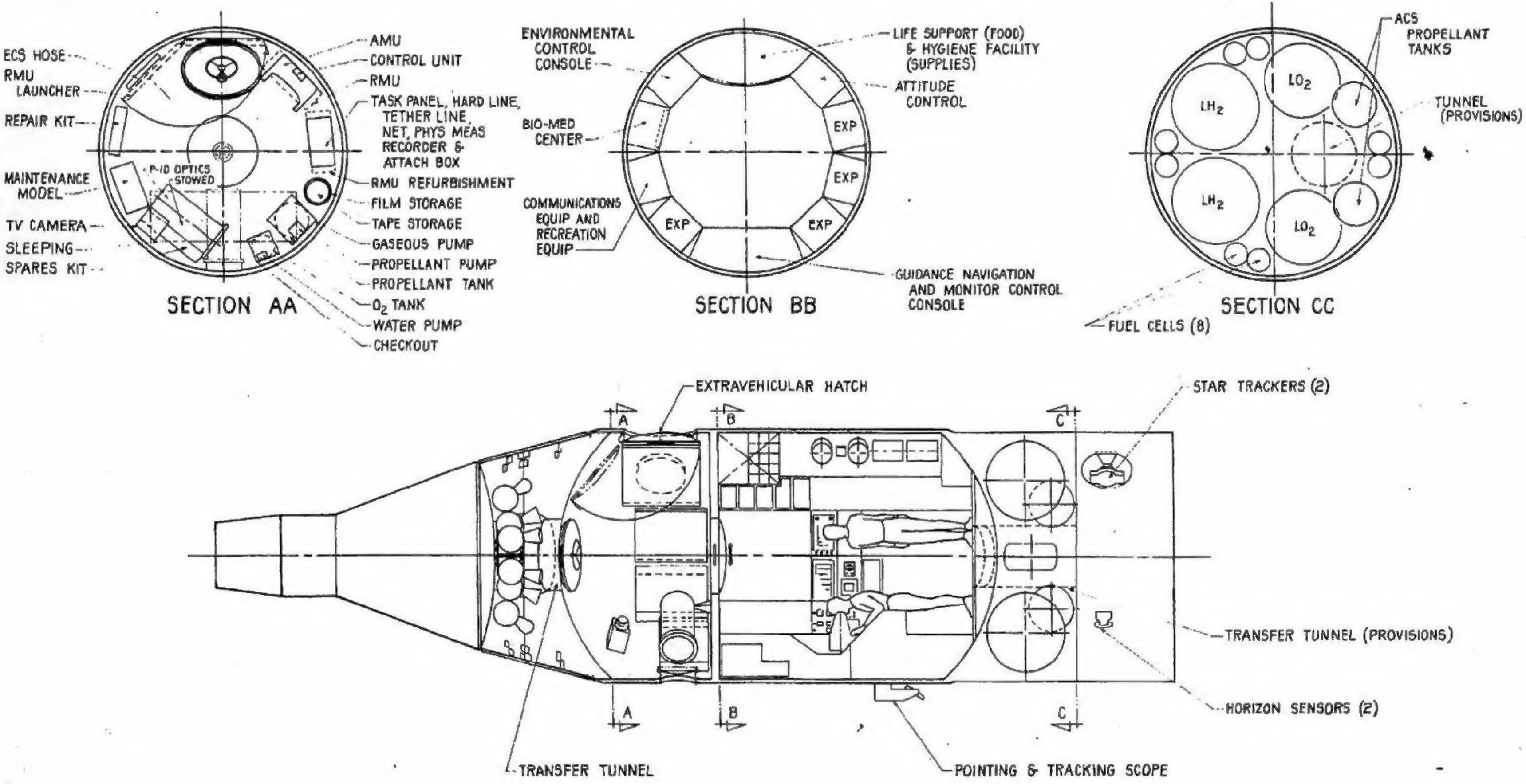
ECS HOSE
RMU LAUNCHER
REPAIR KIT
MAINTENANCE MODEL
TV CAMERA
SLEEPING
SPARES KIT
P-10 OPTICS STOWED
AMU
CONTROL UNIT
RMU
TASK PANEL, HARD LINE, TETHER LINE, NET, PHYS MEAS RECORDER & ATTACH BOX
RMU REFURBISHMENT
FILM STORAGE
TAPE STORAGE
GASEOUS PUMP
PROPELLANT PUMP
PROPELLANT TANK
O_2 TANK
WATER PUMP
CHECKOUT
SECTION AA
ENVIRONMENTAL CONTROL CONSOLE
BIO-MED CENTER
COMMUNICATIONS EQUIP AND RECREATION EQUIP
EXP
EXP
EXP
EXP
LIFE SUPPORT (FOOD) & HYGIENE FACILITY (SUPPLIES)
ATTITUDE CONTROL
GUIDANCE NAVIGATION AND MONITOR CONTROL CONSOLE
SECTION BB
LH_2
LH_2
LO_2
LO_2
ACS PROPELLANT TANKS
TUNNEL (PROVISIONS)
FUEL CELLS (8)
SECTION CC
EXTRAVEHICULAR HATCH
A
A
B
B
C
C
STAR TRACKERS (2)
TRANSFER TUNNEL (PROVISIONS)
HORIZON SENSORS (2)
TRANSFER TUNNEL
POINTING & TRACKING SCOPE

THIS DOCUMENT CONTAINS INFORMATION AFFECTING THE NATIONAL DEFENSE OF THE UNITED STATES WITHIN THE MEANING OF THE ESPIONAGE LAWS, TITLE 18 U.S.C. SECTION 793 AND 794. THE TRANSMISSION OR THE REVELATION OF ITS CONTENTS IN ANY MANNER TO AN UNAUTHORIZED PERSON IS PROHIBITED BY LAW.

~~CONFIDENTIAL~~

DOWNGRADED AT 3 YEAR INTERVALS;
DECLASSIFIED AFTER 12 YEARS
DOD DIR 5200.10

AEROSPACE CORPORATION

V19815

MODULAR CONCEPT

① : CAN; INCL. MISSION EQUIPT.
(1A) : CAN; LESS MISSION EQUIPT.
② : FUEL CELL/PROPELLANTS/ TEST MODULE SECTION
③ : SENSOR MODULE

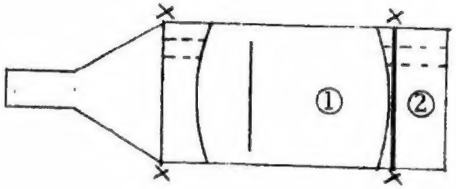

- INITIAL MOL FLIGHTS

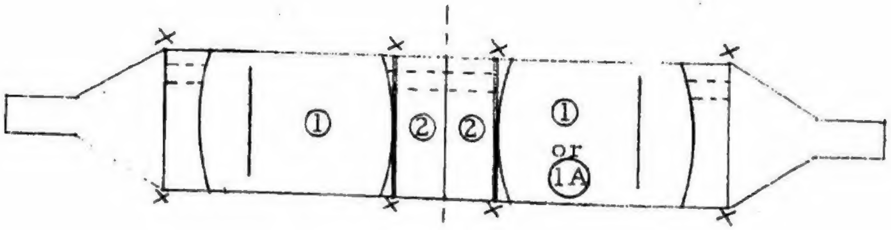

- BACK-TO-BACK RENDEZVOUS

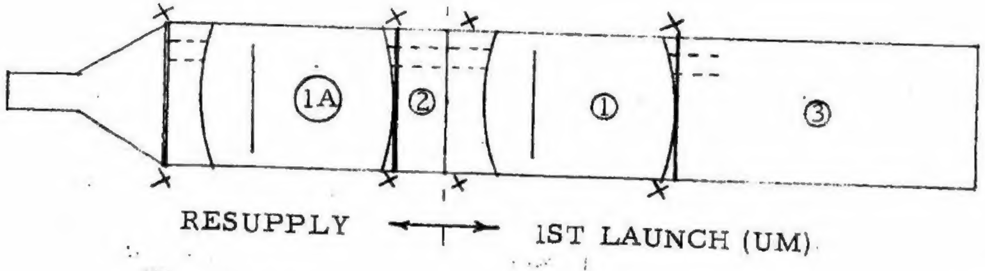
(1A)
②
①
③
RESUPPLY
1ST LAUNCH (UM)

- OPERATIONAL FLIGHTS

V19809
AD65-0000-00259-**003**

OPERATIONAL CONFIGURATION CONCEPT

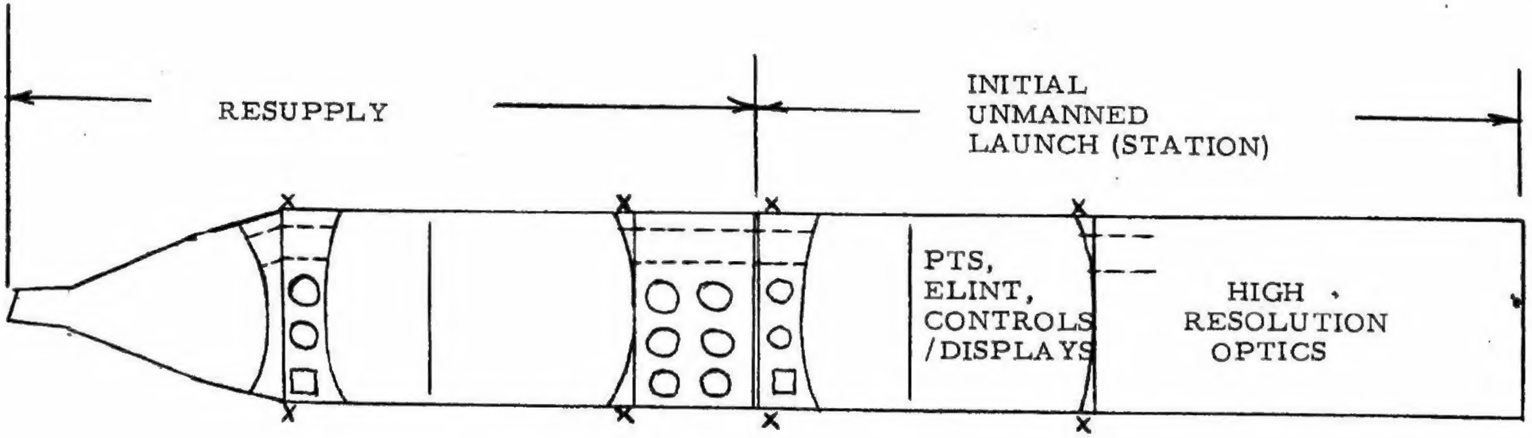
RESUPPLY
INITIAL UNMANNED LAUNCH (STATION)
PTS, ELINT, CONTROLS /DISPLAYS
HIGH RESOLUTION OPTICS

- ATTITUDE CONTROL/SUSTENANCE
- POWER (FUEL CELLS) ← OR →
- LIFE SUPPORT (ECS + EXPENDABLES)
- MISSION SUPPLIES (E. G. FILM)
- DATA CAPSULES
- REACTANTS & PROPELLANTS

- ATTITUDE CONTROL/SUSTENANCE
- (RADIOISOTOPES)
- LIFE SUPPORT (ECS)
- SENSORS
- INFORMATION SUBSYSTEM
- CONTROL/DISPLAYS

This material contains information affecting the national defense of the United States within the meaning of the Espionage Laws, Title 18 U.S.C., Section 793 and 794, the transmission or the revelation of its contents in any manner to an unauthorized person is prohibited by law.

DOWNGRADED AT 12 YEAR INTERVALS; NOT AUTOMATICALLY DECLASSIFIED. DOD DIR 5200.10